Serenity
Sliding Door Systems

MEET ACOUSTIC NEEDS

# MedSlide Pro

Featuring an STC 35 Rating, the MedSlide Pro delivers enhanced acoustic privacy for demanding healthcare environments.

- Maximizes Sound Control
- Enhances Patient Comfort & Privacy
- Secures with Locking Hardware

## Superior Acoustic Control

### Engineered for Performance

The MedSlide Pro provides an STC 35 operable system, Serenity's highest level of sound control. Like the Plus model, it combines a Double Sound Seal with an Acoustic Door Bottom that drops into place when closed. The result is exceptional sound isolation and smooth operation—ideal for healthcare spaces, where privacy and comfort are essential.

## MedSlide Pro Features

**Surface-Mounted Design**
Mounts flush to the wall for maximum space savings

**Soft Close / Soft Open**
Provides smooth, controlled door movement

**STC 35 Rating**
Provides sound protection for the operable system

**Acoustic Door Bottom**
Drops automatically to create a sound seal

### OPTIONAL UPGRADES

**Key/Privacy Lockable**
Meet your security needs with various lock types

**Automatic Operator**
Open and close the door automatically with access control hardware

**Antimicrobial Hardware**
Protect against germs with custom additives or specialty metals

Serenity Sliding Door Systems

# Product Technical Information

| | Mounting | Valance | Soft Close & Soft Open | Mechanical Spring Closer | Acoustic Door Bottom | Locking | Aluminum Door | Automatic Operator | Sidelite (Glass by Others) | Transom | STC | Smoke Rating |
|---|---|---|---|---|---|---|---|---|---|---|---|---|
| **MedSlide** | Surface | Squared or Sloped | Standard | -- | Optional | Optional | Optional | -- | -- | -- | -- | -- |
| **MedSlide Plus** | Surface | Squared or Sloped | Standard | -- | Standard | Optional | -- | Optional | -- | -- | STC26[1] | -- |
| **MedSlide Pro** | Surface | Squared or Sloped | Standard | -- | Standard | Optional | -- | Optional | -- | -- | STC35[2] | -- |
| **PowerSlide** | Surface | Standard Valance | Standard | -- | Optional | Access Control by Others | Optional | Standard[3] | Optional | -- | Optional | -- |
| **SurfaceView Slide** | Surface | Squared or Sloped | Standard | Optional | Optional | Optional | Optional | Optional | Standard | Optional | -- | -- |
| **EvenView Slide** | Flush | Fascia Only | Standard | -- | Optional | Optional | Optional | -- | Standard | Optional | -- | -- |
| **SmokeSlide** | Surface | Squared or Sloped | Soft Close Only | Standard | Standard | Optional | Optional | Optional | -- | -- | -- | UL1784[4] |
| **SecureSlide** | Surface | Squared or Sloped | Soft Close Only | Standard | Optional | Auto Latch Standard | Optional | Optional | Optional | Optional | -- | -- |
| **SyncSlide** | Surface | Squared or Sloped | Standard | -- | Optional | Optional | Optional | Optional | Optional | -- | -- | -- |

-- = Not Available
1 = Tested per ASTM E90 on a 48" x 84.5" operable door with an STC rating of 26. Performance may vary with other sizes; no guarantee is made without testing the specific configuration. Test results available here.
2 = Tested per ASTM E90 on a 44" x 83.75" operable door with an STC rating of 35. Performance may vary with other sizes; no guarantee is made without testing the specific configuration. Test results available here.
3 = Includes Record 7000 Series Automatic Opener
4 = Approved for door leaf sizes from 44" x 84" up to a maximum of 56" x 96" per the current UL 1784 listing. Performance applies only to doors built to the same configuration; changes to size, materials, or sealing details may affect results. Wood test results are available here, and Aluminum test results are available here.

## **Surface Mount Formulas** (Excluding SurfaceView & SyncSlide)

| | |
|---|---|
| **Finished Frame** (Inches) | Frame Width = Clear Open Width + 5<br>Frame Height = Clear Open Height |
| **Rough Opening** (Inches) | Rough Open Width = Frame Width + 1.5<br>Rough Open Height = Frame Height + 1 |
| **Door Slab** (Inches) | Slab Width = Clear Open Width + 8<br>Slab Height = Clear Open Height |

## EvenView Formulas

| | |
|---|---|
| **Finished Frame** (Inches) | Frame Width = Clear Open Width + 5.75<br>Frame Height = Clear Open Height + 2.75 |
| **Sidelite** (Inches) | Minimum Sidelite Width = Clear Open Width + 1.5<br>Sidelite Height = Clear Open Height - 1.5 |
| **Rough Opening** (Inches) | Rough Open Width = Finished Frame + Sidelite + 3<br>Rough Open Height = Finished Frame + 1 |
| **Door Slab** (Inches) | Slab Width = Clear Open Width + 7.25<br>Slab Height = Clear Open Height |

**Frame**

- Standard frame depths are 5", 5-1/4", 5-1/2", 6-1/8" and 7-1/4". Please contact your local sales rep for questions regarding other frame sizes.
- The EvenView Slide frame is available only in a 4-7/8" depth; greater depths require a wall starter.
- Standard frame finishes are Clear and Black Anodized. All Powder Coat finishes are considered custom and subject to additional fees.

**Hardware**

- Standard hardware package includes 12" back-to-back ladder pulls, dual soft-close mechanisms, and floor guide, unless otherwise specified in the table above; upgraded packages available at additional cost.
- Standard hardware finishes are 630/32D and 622/19. All other finishes are considered custom and subject to additional fees.
- Standard Schlage C cylinder in 26D finish included with keyed locksets; SFIC and LFIC housings available upon request (cores by others).
- Kenwa PS-12 Mechanical Spring Closer included with SmokeSlide and SecureSlide; optional on other systems at additional cost.

**Seals**

- Triple fin trailing-edge seal included with all systems.
- Felt sound seals installed in receiving channel and track valance for added sound attenuation.
- Pemko Planet SN-RD series acoustic door bottom included on all STC & Smoke-rated openings; optional on other systems at additional cost.

## Supporting Documents

| Test Reports | Installation Manuals | Architectural Specifications |
|---|---|---|
| Link | Link | Link |

# MedSlide Pro

## Product Technical Information

| Call Out | Frame | | Rough Opening | | Door Slab | | Track |
|---|---|---|---|---|---|---|---|
| | **Width** (Inches) | **Height** (Inches) | **Width** (Inches) | **Height** (Inches) | **Width** (Inches) | **Height** (Inches) | **Length** (Inches) |
| 2-8 x 6-8$_1$ | 37 | 80 | 38.5 | 81 | 40 | 80.5 | 75 |
| 3-0 x 6-8$_1$ | 41 | 80 | 42.5 | 81 | 44 | 80.5 | 83 |
| 3-0 x 7-0$_1$ | 41 | 84 | 42.5 | 85 | 44 | 84.5 | 83 |

| Call Out | Wood Door Slab | | | Wood Door Weight (Pounds) |
|---|---|---|---|---|
| | **Width** (Inches) | **Height** (Inches) | **Thickness** (Inches) | **STC45 Rigicore EXLC** (Req'd for STC35 Rating) |
| 2-8 x 6-8$_1$ | 40 | 80.5 | 1-3/4 | 248 |
| 3-0 x 6-8$_1$ | 44 | 80.5 | 1-3/4 | 272 |
| 3-0 x 7-0$_1$ | 44 | 84.5 | 1-3/4 | 286 |

1 = Tested per ASTM E90 on a 44" x 83.75" operable door with an STC rating of 35. Performance may vary with other sizes; no guarantee is made without testing the specific configuration. Test results available here.

** Dimensions listed are for reference only and do not represent the full range of available sizes. Please consult your Serenity Sliding Door Systems sales representative for assistance with specific sizing requirements.

## Elevations

MedSlide Pro with Squared Valance

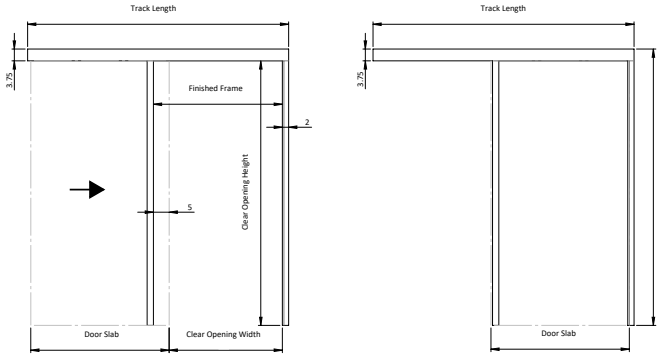


MedSlide Pro with Sloped Valance

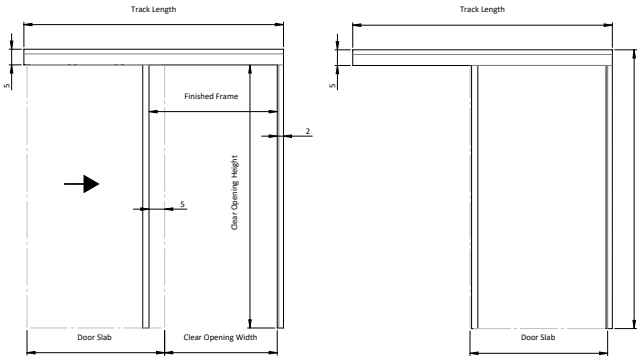

Serenity Sliding Door Systems

# MedSlide Pro

**Details - Squared Valance**

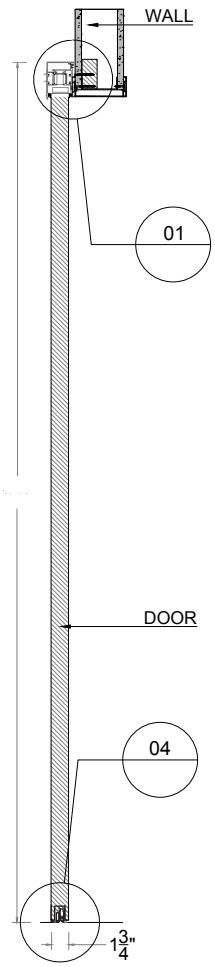


VIEW A - A
SCALE 3/4"=1'-0"

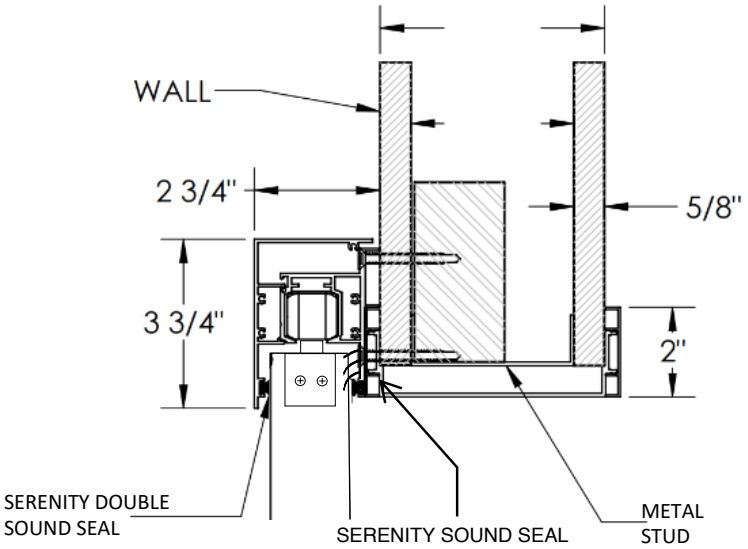


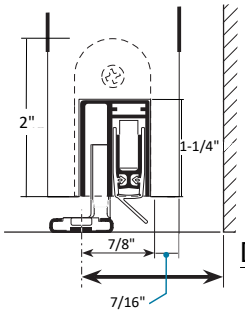


DETAIL 04

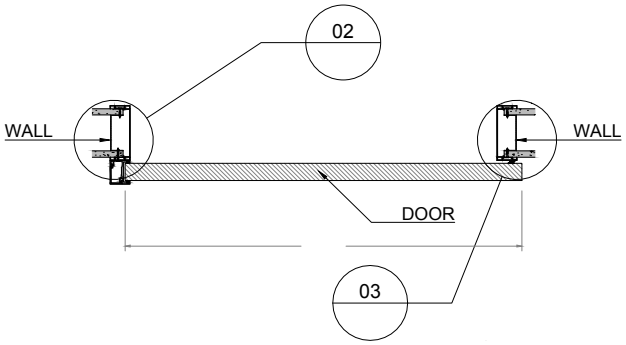


VIEW B - B
SCALE 3/4"=1'-0"

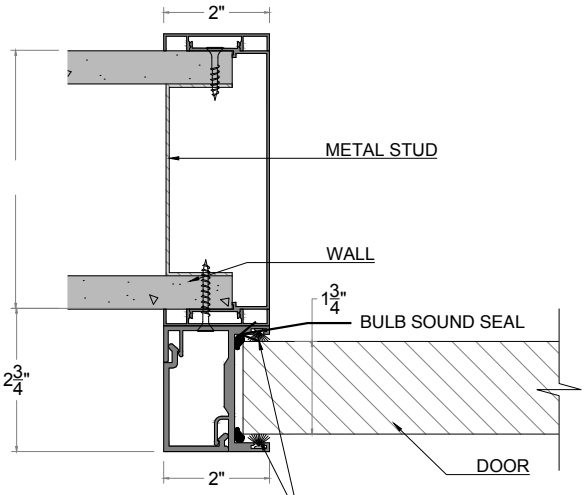


DETAIL 02
SCALE 4"=1'-0"

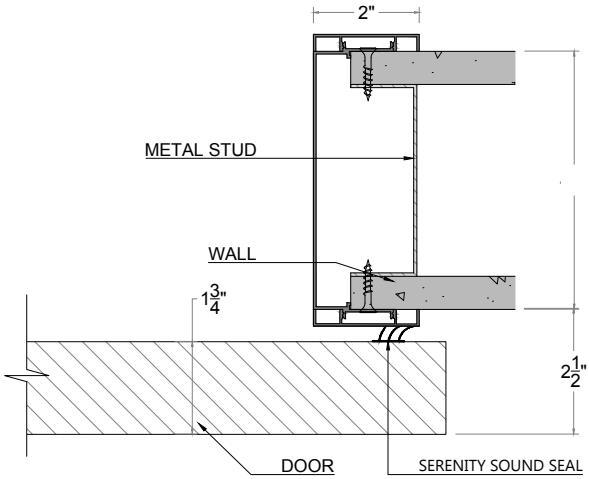


DETAIL 03
SCALE 4"=1'-0"

Serenity Sliding Door Systems

# MedSlide Pro

**Details - Sloped Valance**

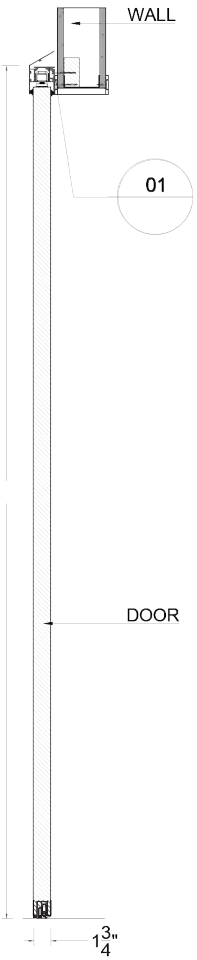


VIEW A - A
SCALE 3/4"=1'-0"

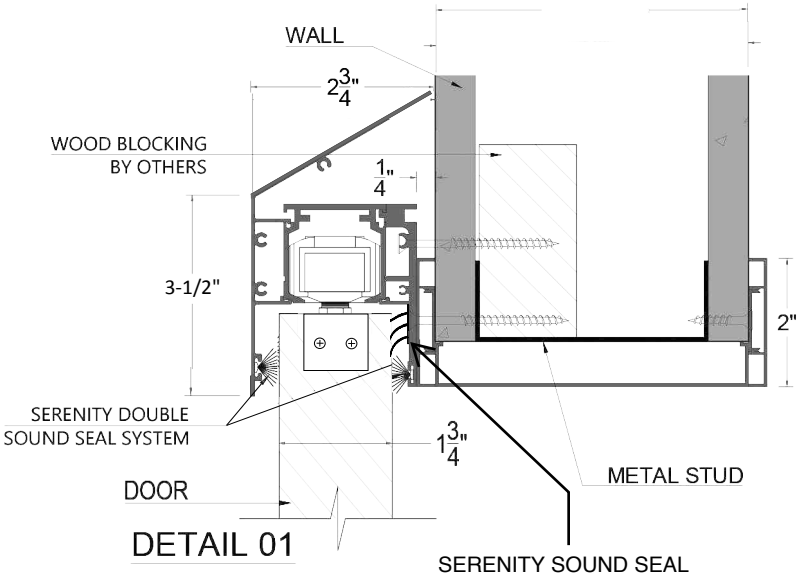


DETAIL 01

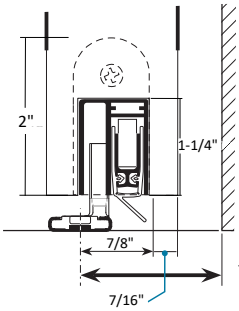


DETAIL 04

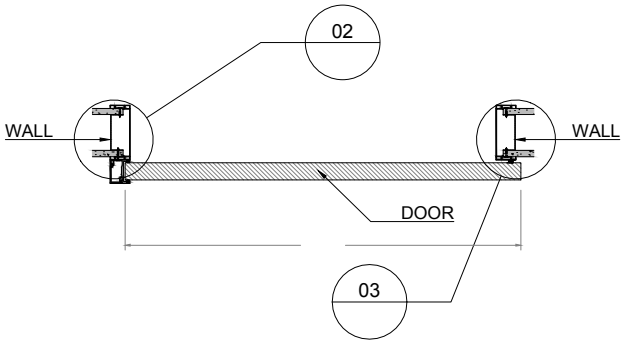


VIEW B - B
SCALE 3/4"=1'-0"

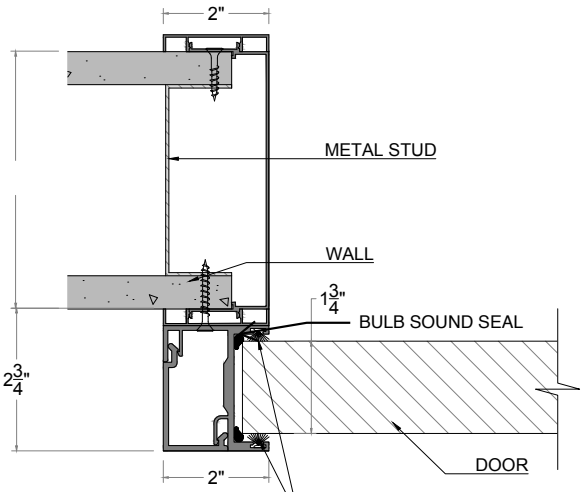


DETAIL 02
SCALE 4"=1'-0"

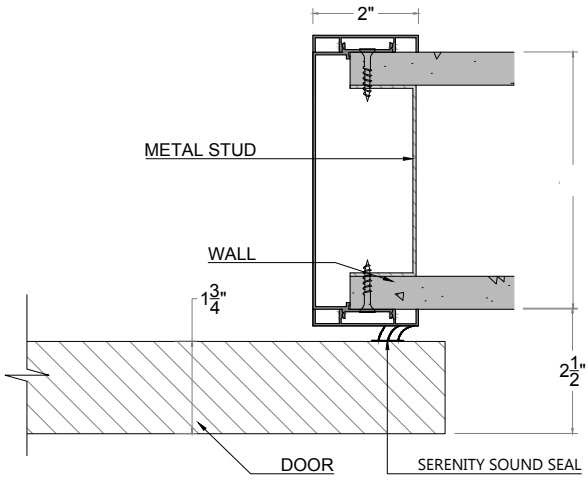


DETAIL 03
SCALE 4"=1'-0"