Serenity
Sliding Door Systems

SEALED FOR SOUND

MedSlide Plus

Featuring an STC 26 Rating, the MedSlide Plus delivers reliable acoustic performance with cost-effective value.

- Delivers Reliable Sound Control
- Maintains Easy Accessibility
- Provides Cost Savings in Comparison to STC 35

Sound Rated
& Ideal for Healthcare

Engineered with an STC 26 operable system rating, the MedSlide Plus combines a Double Sound Seal with an Acoustic Door Bottom that drops into place when closed. Beyond its sound rating, this system also provides space savings, ease of access, and security. It's an economical solution for facilities needing reliable acoustic control.

MedSlide Plus Features

Surface-Mounted Design
Mounts flush to the wall for maximum space savings

Value Engineered
Reduces cost while meeting project needs

STC 26 Rating
Provides sound protection for the operable system

SCLC-5 Core
Delivers lasting value and dependable performance

Soft Close / Soft Open
Provides smooth, controlled door movement

Acoustic Door Bottom
Drops automatically to create a sound seal

OPTIONAL UPGRADES

Key/Privacy Lockable
Meet your security needs with various lock types

Automatic Operator
Open and close the door automatically with access control hardware

Antimicrobial Hardware
Protect against germs with custom additives or specialty metals

Serenity Sliding Door Systems

Product Technical Information

	Mounting	Valance	Soft Close & Soft Open	Mechanical Spring Closer	Acoustic Door Bottom	Locking	Aluminum Door	Automatic Operator	Sidelite (Glass by Others)	Transom	STC	Smoke Rating
MedSlide	Surface	Squared or Sloped	Standard	--	Optional	Optional	Optional	--	--	--	--	--
MedSlide Plus	Surface	Squared or Sloped	Standard	--	Standard	Optional	--	Optional	--	--	STC26[1]	--
MedSlide Pro	Surface	Squared or Sloped	Standard	--	Standard	Optional	--	Optional	--	--	STC35[2]	--
PowerSlide	Surface	Standard Valance	Standard	--	Optional	Access Control by Others	Optional	Standard[3]	Optional	--	Optional	--
SurfaceView Slide	Surface	Squared or Sloped	Standard	Optional	Optional	Optional	Optional	Optional	Standard	Optional	--	--
EvenView Slide	Flush	Fascia Only	Standard	--	Optional	Optional	Optional	--	Standard	Optional	--	--
SmokeSlide	Surface	Squared or Sloped	Soft Close Only	Standard	Standard	Optional	Optional	Optional	--	--	--	UL1784[4]
SecureSlide	Surface	Squared or Sloped	Soft Close Only	Standard	Optional	Auto Latch Standard	Optional	Optional	Optional	Optional	--	--
SyncSlide	Surface	Squared or Sloped	Standard	--	Optional	Optional	Optional	Optional	Optional	--	--	--

-- = Not Available
1 = Tested per ASTM E90 on a 48" x 84.5" operable door with an STC rating of 26. Performance may vary with other sizes; no guarantee is made without testing the specific configuration. Test results available here.
2 = Tested per ASTM E90 on a 44" x 83.75" operable door with an STC rating of 35. Performance may vary with other sizes; no guarantee is made without testing the specific configuration. Test results available here.
3 = Includes Record 7000 Series Automatic Opener
4 = Approved for door leaf sizes from 44" x 84" up to a maximum of 56" x 96" per the current UL 1784 listing. Performance applies only to doors built to the same configuration; changes to size, materials, or sealing details may affect results. Wood test results are available here, and Aluminum test results are available here.

Surface Mount Formulas (Excluding SurfaceView & SyncSlide)

Finished Frame (Inches)	Frame Width = Clear Open Width + 5 Frame Height = Clear Open Height
Rough Opening (Inches)	Rough Open Width = Frame Width + 1.5 Rough Open Height = Frame Height + 1
Door Slab (Inches)	Slab Width = Clear Open Width + 8 Slab Height = Clear Open Height

EvenView Formulas

Finished Frame (Inches)	Frame Width = Clear Open Width + 5.75 Frame Height = Clear Open Height + 2.75
Sidelite (Inches)	Minimum Sidelite Width = Clear Open Width + 1.5 Sidelite Height = Clear Open Height - 1.5
Rough Opening (Inches)	Rough Open Width = Finished Frame + Sidelite + 3 Rough Open Height = Finished Frame + 1
Door Slab (Inches)	Slab Width = Clear Open Width + 7.25 Slab Height = Clear Open Height

Frame

- Standard frame depths are 5", 5-1/4", 5-1/2", 6-1/8" and 7-1/4". Please contact your local sales rep for questions regarding other frame sizes.
- The EvenView Slide frame is available only in a 4-7/8" depth; greater depths require a wall starter.
- Standard frame finishes are Clear and Black Anodized. All Powder Coat finishes are considered custom and subject to additional fees.

Hardware

- Standard hardware package includes 12" back-to-back ladder pulls, dual soft-close mechanisms, and floor guide, unless otherwise specified in the table above; upgraded packages available at additional cost.
- Standard hardware finishes are 630/32D and 622/19. All other finishes are considered custom and subject to additional fees.
- Standard Schlage C cylinder in 26D finish included with keyed locksets; SFIC and LFIC housings available upon request (cores by others).
- Kenwa PS-12 Mechanical Spring Closer included with SmokeSlide and SecureSlide; optional on other systems at additional cost.

Seals

- Triple fin trailing-edge seal included with all systems.
- Felt sound seals installed in receiving channel and track valance for added sound attenuation.
- Pemko Planet SN-RD series acoustic door bottom included on all STC & Smoke-rated openings; optional on other systems at additional cost.

Supporting Documents

Test Reports	Installation Manuals	Architectural Specifications
Link	Link	Link

MedSlide Plus

Product Technical Information

Call Out	Frame		Rough Opening		Door Slab		Track
	Width (Inches)	Height (Inches)	Width (Inches)	Height (Inches)	Width (Inches)	Height (Inches)	Length (Inches)
2-8 x 6-8$_1$	37	80	38.5	81	40	80	75
3-0 x 6-8$_1$	41	80	42.5	81	44	80	83
3-0 x 7-0$_1$	41	84	42.5	85	44	84	83
3-4 x 7-0	45	84	46.5	85	48	84	91
3-6 x 7-0 TrimFit	46.5	84	48	85	48	84	93

Call Out	Wood Door Slab			Wood Door Weight (Pounds)
	Width (Inches)	Height (Inches)	Thickness (Inches)	SCLC-5
2-8 x 6-8$_1$	40	80	1-3/4	133
3-0 x 6-8$_1$	44	80	1-3/4	146
3-0 x 7-0$_1$	44	84	1-3/4	154
3-4 x 7-0	48	84	1-3/4	168
3-6 x 7-0 TrimFit	48	84	1-3/4	168

1 = Tested per ASTM E90 on a 48" x 84.5" operable door with an STC rating of 26. Performance may vary with other sizes; no guarantee is made without testing the specific configuration. Test results available here.

** Dimensions listed are for reference only and do not represent the full range of available sizes. Please consult your Serenity Sliding Door Systems sales representative for assistance with specific sizing requirements.

Elevations

MedSlide Plus with Squared Valance

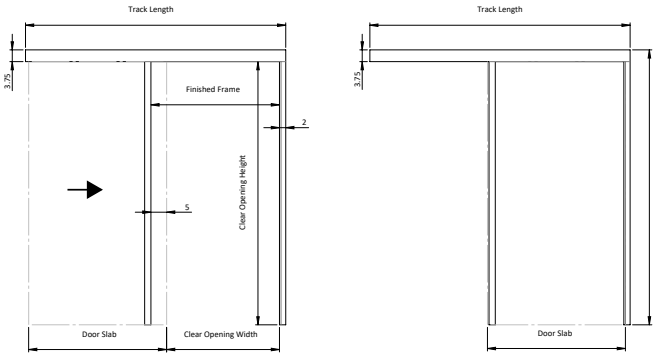

MedSlide Plus with Sloped Valance

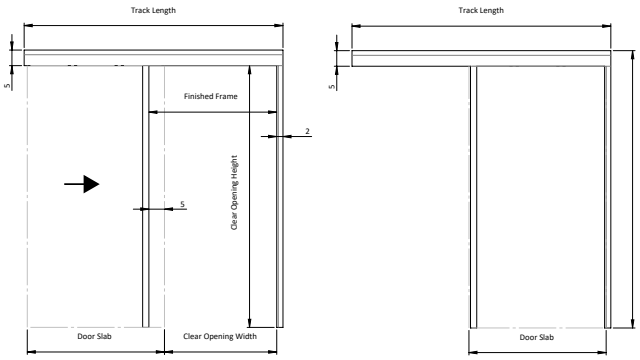

MedSlide Plus

Details - Squared Valance

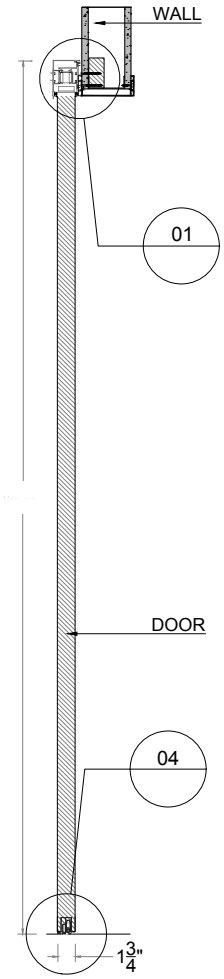

VIEW A - A
SCALE 3/4"=1'-0"

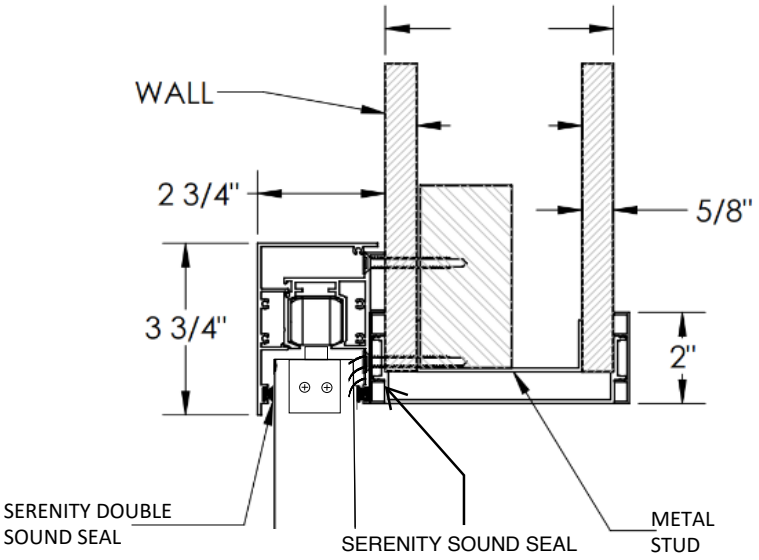

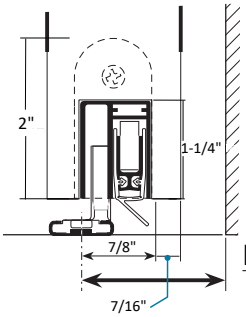

DETAIL 04

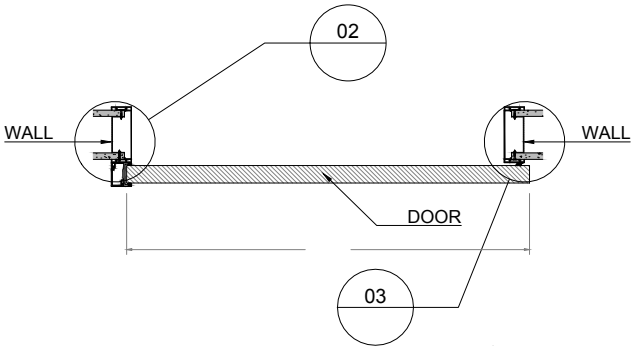

VIEW B - B
SCALE 3/4"=1'-0"

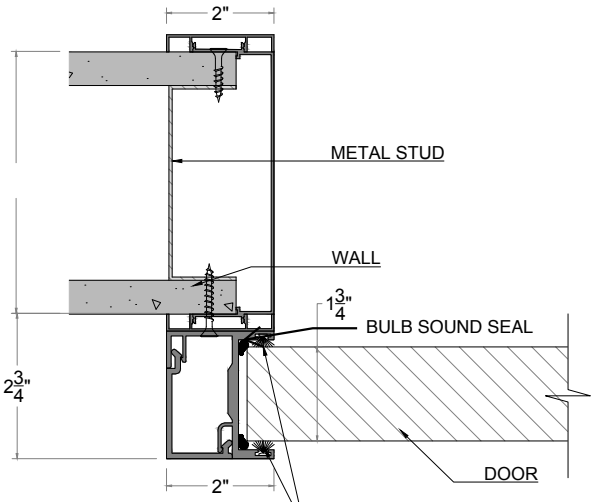

DETAIL 02
SCALE 4"=1'-0"

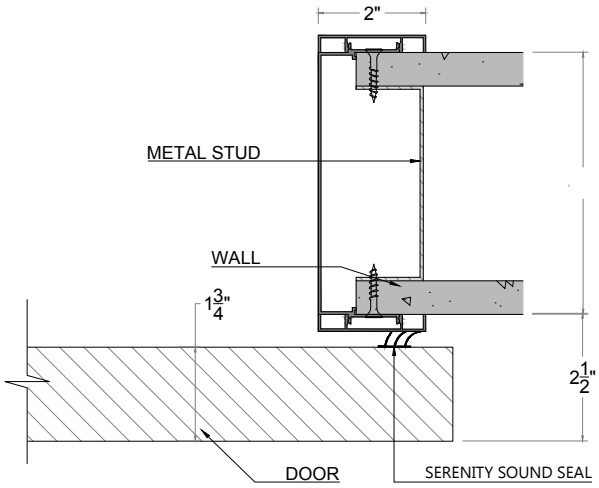

DETAIL 03
SCALE 4"=1'-0"

Serenity Sliding Door Systems

MedSlide Plus

Details - Sloped Valance

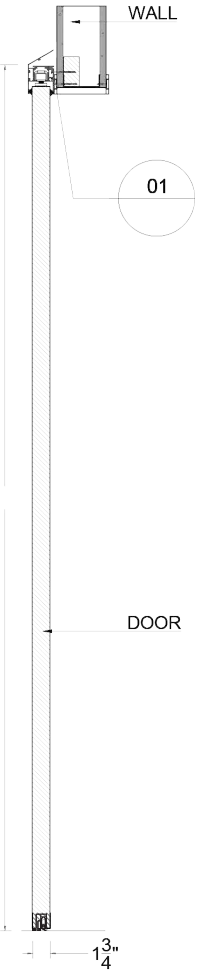

VIEW A - A
SCALE 3/4"=1'-0"

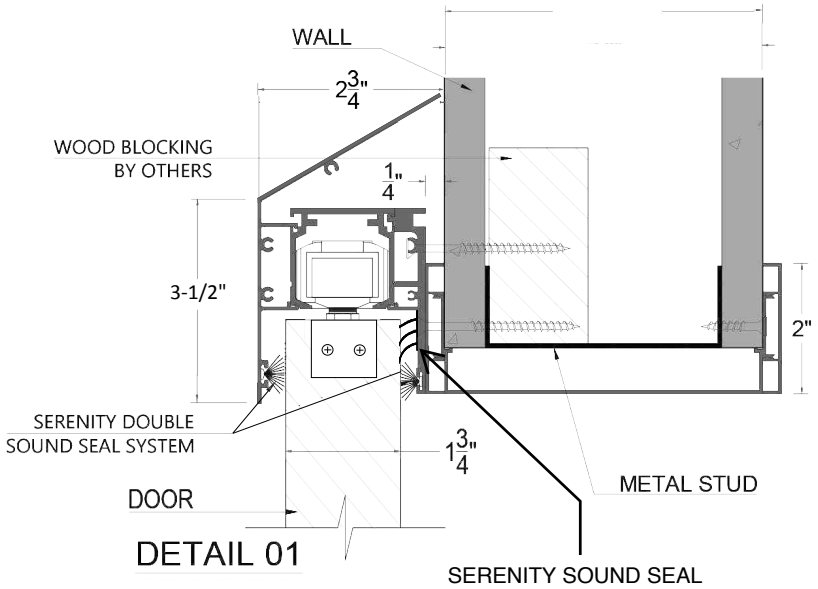

DETAIL 01

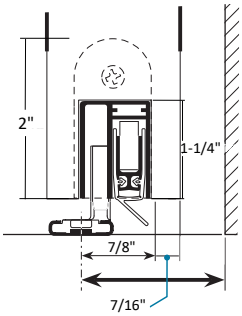

DETAIL 04

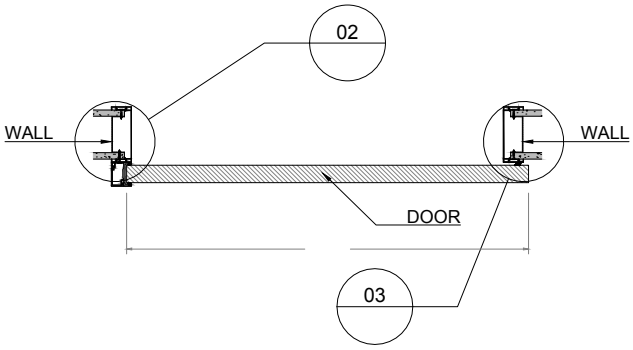

VIEW B - B
SCALE 3/4"=1'-0"

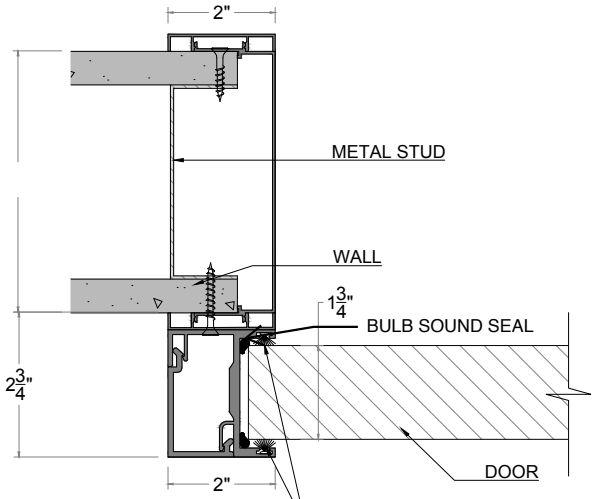

DETAIL 02
SCALE 4"=1'-0"

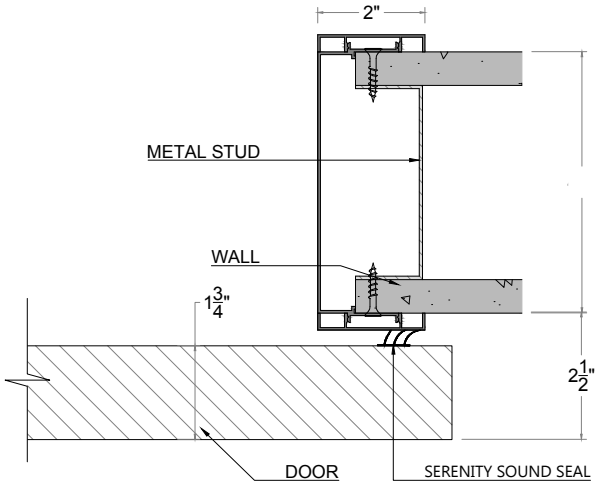

DETAIL 03
SCALE 4"=1'-0"